REV.	DESCRIPTION	DATE	APPROVED

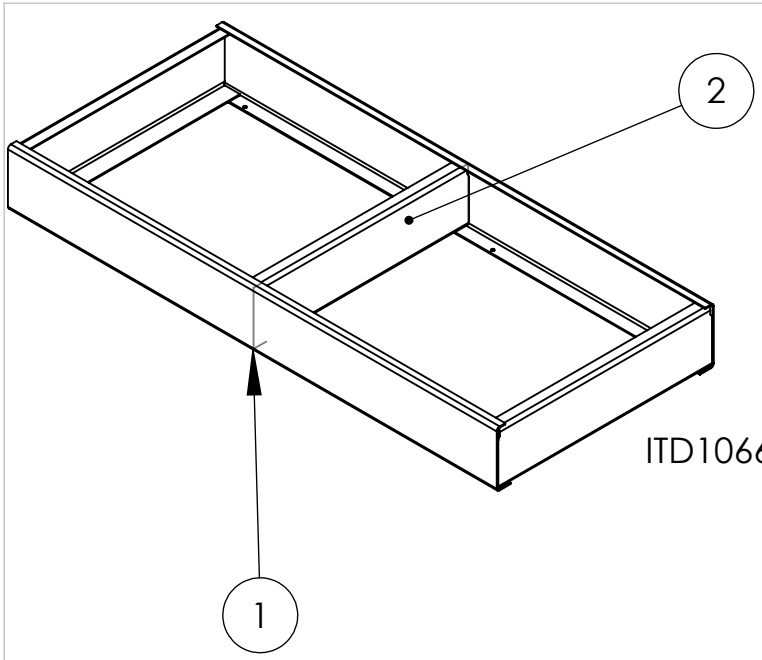

ITD1066 No divider

ITD1066D With divider

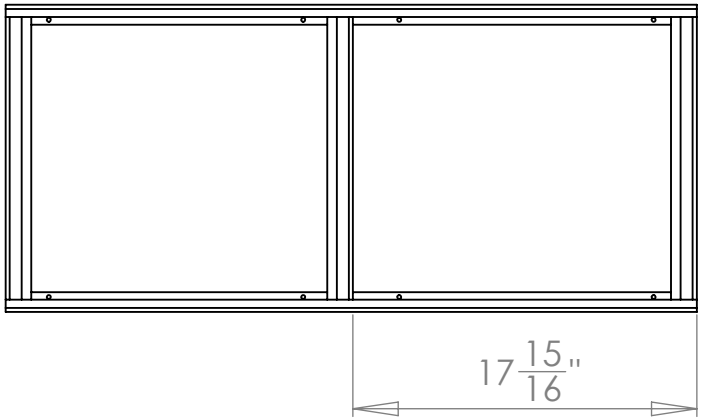

ITEM NO.	PART NUMBER	DESCRIPTION	QTY.
1	ITD6374	36" Box Top Front/Rear Rail	2
2	ITD6905-04	Box Top Divider	3

DRAWN BY: KBH DRAWN DATE: 12/13/2012

UNLESS OTHERWISE SPECIFIED:

DIMENSIONS ARE IN INCHES
TOLERANCES:
FRACTIONAL ± 1/16"
ANGULAR: MACH ± 0.25° BEND ± 1.5°
TWO PLACE DECIMAL ± 0.020"
THREE PLACE DECIMAL ± 0.005"

MATERIAL: See BOM

DO NOT SCALE DRAWING

Inventive LLC
In The Ditch Towing Products

PART NAME
36" Alum Box Top

SIZE A PART NO. ITD1066

SHEET SCALE 1:10 SHEET 1 of 1

5 4 3 2 1